NOTES:

1.0 CONSTRUCTION
- ◊ 1.1 MAXIMUM BLADE IMBALANCE: 4.0 gm-cm
- ◊ 1.2 MAXIMUM BLADE RUNOUT: 3.15 mm

2.0 PERFORMANCE:
- ◊ 2.1 RATED VOLTAGE: 12.0 VOLTS
- ◊ 2.2 MAXIMUM CURRENT DRAW:
  - 2.2.1 HIGH SPEED: 24.5 AMPS
  - 2.2.2 LOW SPEED: 19.3 AMPS
- ◊ 2.3 MINIMUM SPEED:
  - 2.3.1 HIGH SPEED: 2200 RPM
  - 2.3.1 LOW SPEED: 2000 RPM
- 2.4 ROTATION: CLOCKWISE (FROM SHAFT SIDE)
- 2.5 FAN TYPE: PUSHER (SHAFT SIDE UP)

3.0 ASSEMBLY
- 3.1 WIRE COLOR:
  - 3.1.1 HIGH SPEED: GREY & BROWN (+)
  - 3.1.2 LOW SPEED: GREY (+)
- 3.2 TORQUE FOR ITEM 3: 2.25-2.84 N.m.

4.0 MATERIAL:
- 4.1 SHROUD, BLADE & FINGERGUARD: 15% GLASS FIBER 25% MINERAL REINFORCED NYLON 66 OR EQUIVALENT.
  - 4.1.1 APPROVED MATERIALS
    - 4.1.1.1 WELLMAN MRGF25/15 42H-N OR EQUIVALENT
  - 4.1.2 COLOR: BLACK
  - 4.1.3 MATERIAL SHALL MEET THE FOLLOWING SPECIFICATIONS:
    - 4.1.3.1 TENSILE STRENGTH: 120 MPa
    - 4.1.3.2 DENSITY: 1.46 g/cm3
    - 4.1.3.3 ELONGATION AT BREAK: 3%
    - 4.1.3.4 FLEXURAL MODULUS: 7500 MPa
    - 4.1.3.5 HEAT DEFLECTION TEMPERATURE @ 1.8 MPa: 200°C
- 4.2 TORQUE DRIVE: SINTERED ALLOY

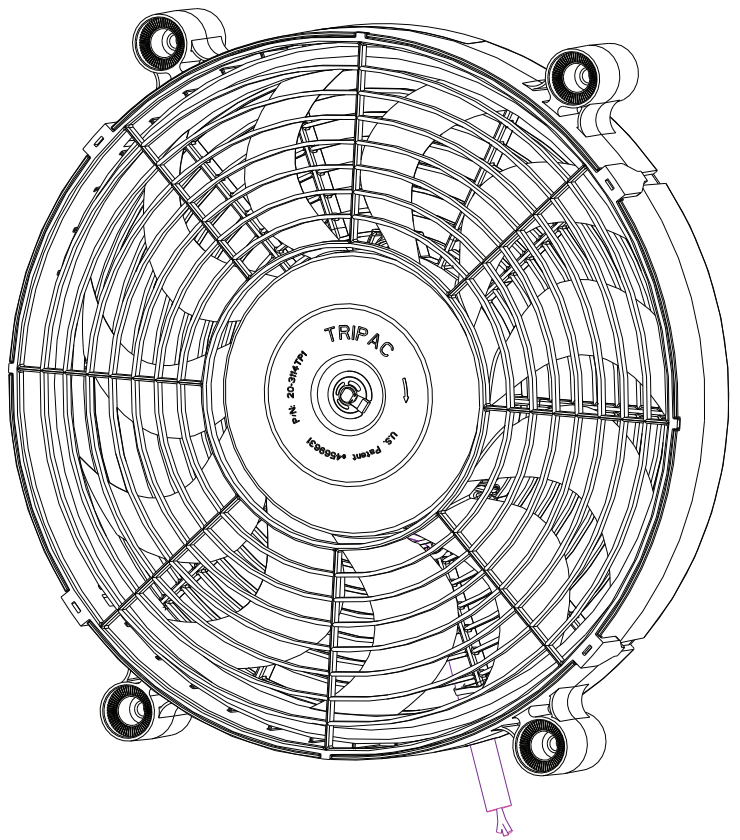

REV	ECR #	DESCRIPTION	CHG BY	APP'D BY	DATE
A	08-002	REMOVE LEFT VIEW, UPDATE WIRE LENGTH, ADD ZIPTIE VIEW	AP	RD	1/24/08
-		ENGINEERING RELEASE			7/3/07

ITEM #	TRIPAC P/N	DESCRIPTION	QTY
Component Part List			

CAD SYSTEM: Pro/E Wildfire

THIRD ANGLE PROJECTION

METRIC FORMAT:
UNLESS OTHERWISE SPECIFIED
DIMENSIONS ARE IN MILLIMETERS
WITH IMPERIAL INCH CONVERSIONS IN [INCHES]

TOLERANCES UNLESS OTHERWISE SPECIFIED:
.0 DEC ± 3.0 | .00 DEC ± 0.50 | ANG ± 2.0
[.00] DEC ± [.XX] | [.000] DEC ± [.XXX]

MATERIAL: SEE NOTES

SURFACES | HOLE DIA ± .XX ± [.XXX] | HOLE SPACE ± .XX ± [.XXX] NON-CUMULATIVE | HOLE LOC ± ±

FINISH: NONE

DIMENSIONS IN (PARENTHESIS) ARE FOR INFORMATION ONLY. TOLERANCES DO NOT APPLY.
◆DIAMONDS REPRESENT EITHER SPC REQUIRED OR 100% VERIFICATION REQUIRED.

WEIGHT (KG): | MFG/PURCH: M

Tripac International, Inc.
9224 Oak Grove Road
Fort Worth, TX
76140 USA

THIS DOCUMENT AND THE INFORMATION CONTAINED THEREIN ARE PROPRIETARY TO TRIPAC AUTOMOTIVE AND SHALL NOT BE USED OR DISCLOSED TO OTHERS, IN WHOLE OR IN PART, WITHOUT THE WRITTEN AUTHORIZATION OF TRIPAC AUTOMOTIVE.

TITLE: FAN ASM, 14" SLIMLINE
12V VAL 2 SPEED, FULL LEAD

SIZE C | DRAWING NO. 14-SL14R9 | SHEET 1 OF 2 | REV A

NEXT DRAWING: | SCALE: NONE

DO NOT REVISE THIS DRAWING WITHOUT REFERRING TO MODEL: 14-SL14R9

DRAWN BY: PUTMAN

APPROVED BY: DAVIS

DATE DRAWN: 12/18/06

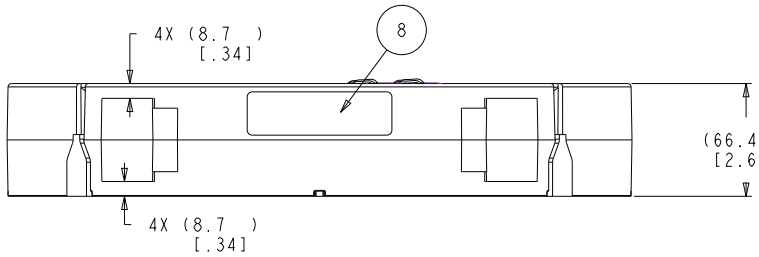

◊ AIRFLOW

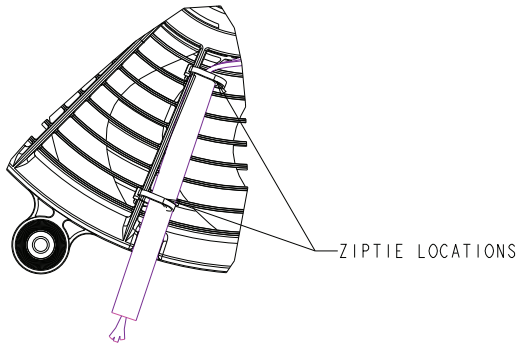

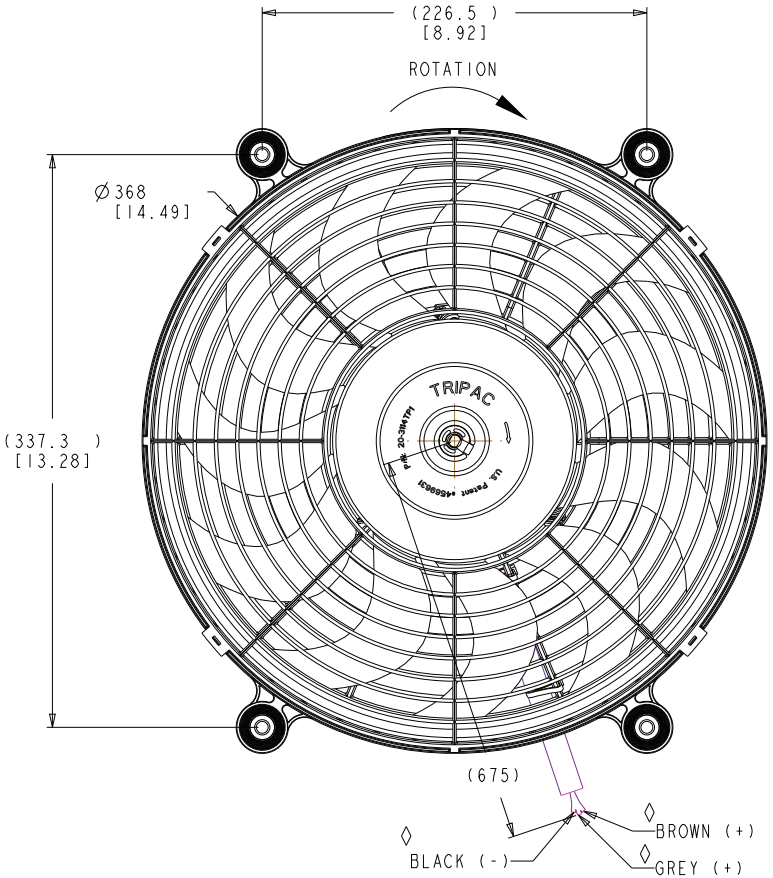

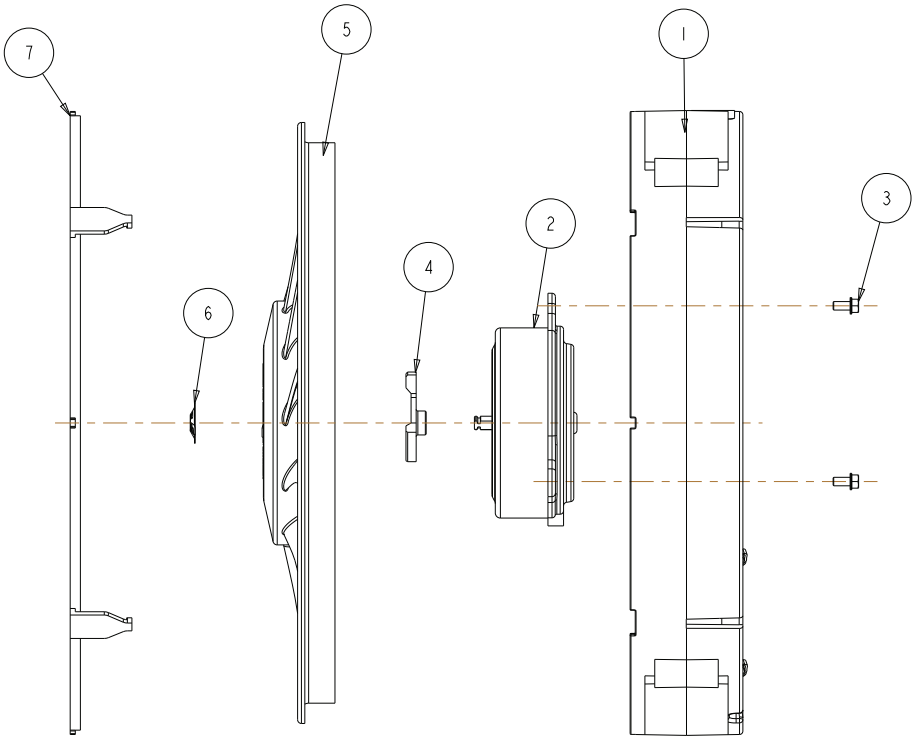

A	08-002	REMOVE LEFT VIEW, UPDATE WIRE LENGTH, ADD ZIPTIE VIEW	AP	RD	1/24/08
-		ENGINEERING RELEASE			7/3/07
REV	ECR #	DESCRIPTION	CHG BY	APP'D BY	DATE

ITEM #	TRIPAC P/N	DESCRIPTION	QTY
9	13-6005	TIE, 3" CABLE BLACK ZIP	2
8	14-6005	LABEL, FAN P/N DATE(RED & SIL)	1
7	20-3014	FINGERGUARD, 14" SLIMLINE SHROUD	1
6	14-7012	CLIP, MOTOR MOUNT VALEO	1
5	20-3114TP1	BLADE, 14" THREE POINT MOUNT	1
4	19-3001	TORQUE DRIVE, 3 POINT MOUNT	1
3	14-7073	SCREW, M5 X 0.8 -10 TAPTITE	3
2	15-5402	MOTOR, VAL, 12V, 2 SPD LP14	1
1	20-5014-03	SHROUD, 14" SLIMLINE, SERIES 3	1

Component Part List

CAD SYSTEM: Pro/E Wildfire

THIRD ANGLE PROJECTION

METRIC FORMAT:
UNLESS OTHERWISE SPECIFIED
DIMENSIONS ARE IN MILLIMETERS
WITH IMPERIAL INCH CONVERSIONS IN [INCHES]

TOLERANCES UNLESS OTHERWISE SPECIFIED:
.0 DEC ± 3.0 | .00 DEC ± 0.50 | ANG ± 2.0
[.00] DEC ± [.XX] | [.000] DEC ± [.XXX]

MATERIAL: SEE NOTES

SURFACES | HOLE DIA ± .XX ± [.XXX] | HOLE SPACE ± .XX ± [.XXX] NON-CUMULATIVE | HOLE LOC ±

FINISH: NONE

DIMENSIONS IN (PARENTHESIS) ARE FOR INFORMATION ONLY. TOLERANCES DO NOT APPLY. ◊DIAMONDS REPRESENT EITHER SPC REQUIRED OR 100% VERIFICATION REQUIRED.

WEIGHT (KG): | MFG/PURCH: M

Tripac International, Inc.
9224 Oak Grove Road
Fort Worth, TX
76140 USA

THIS DOCUMENT AND THE INFORMATION CONTAINED THEREIN ARE PROPRIETARY TO TRIPAC AUTOMOTIVE AND SHALL NOT BE USED OR DISCLOSED TO OTHERS, IN WHOLE OR IN PART, WITHOUT THE WRITTEN AUTHORIZATION OF TRIPAC AUTOMOTIVE.

TITLE: FAN ASM, 14" SLIMLINE
12V VAL 2 SPEED, FULL LEAD

SIZE: C | DRAWING NO.: 14-SL14R9 | SHEET 2 OF 2 | REV: A

NEXT DRAWING: | SCALE: NONE

DO NOT REVISE THIS DRAWING WITHOUT REFERRING TO MODEL: 14-SL14R9

DRAWN BY: PUTMAN

APPROVED BY: DAVIS

DATE DRAWN: 12/18/06